Alpharetta Front Porch

Existing deck and post layouts

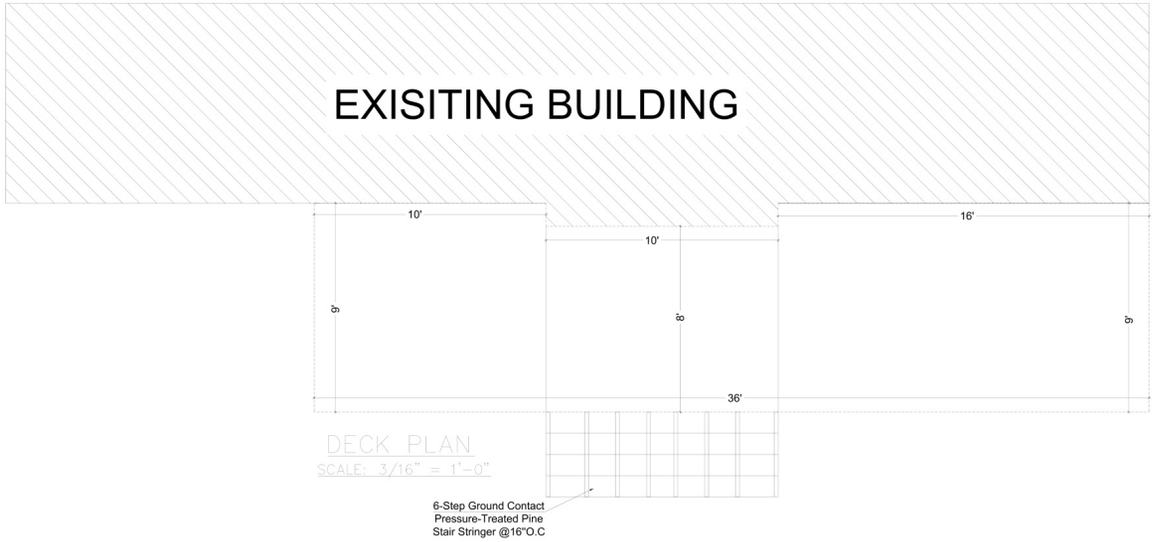

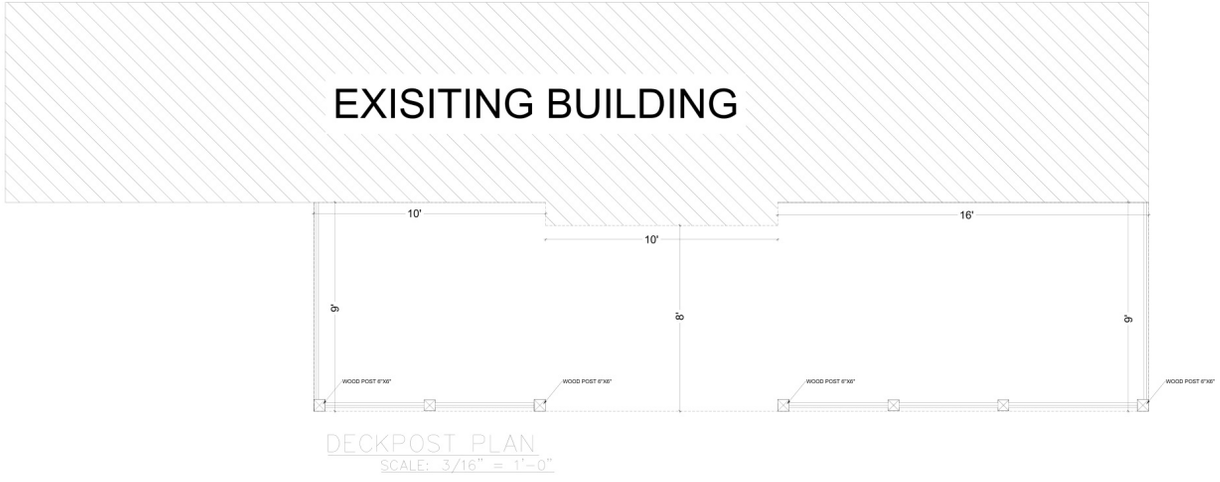

Alpharetta Front Porch

A-03 Footings and proposed pergola

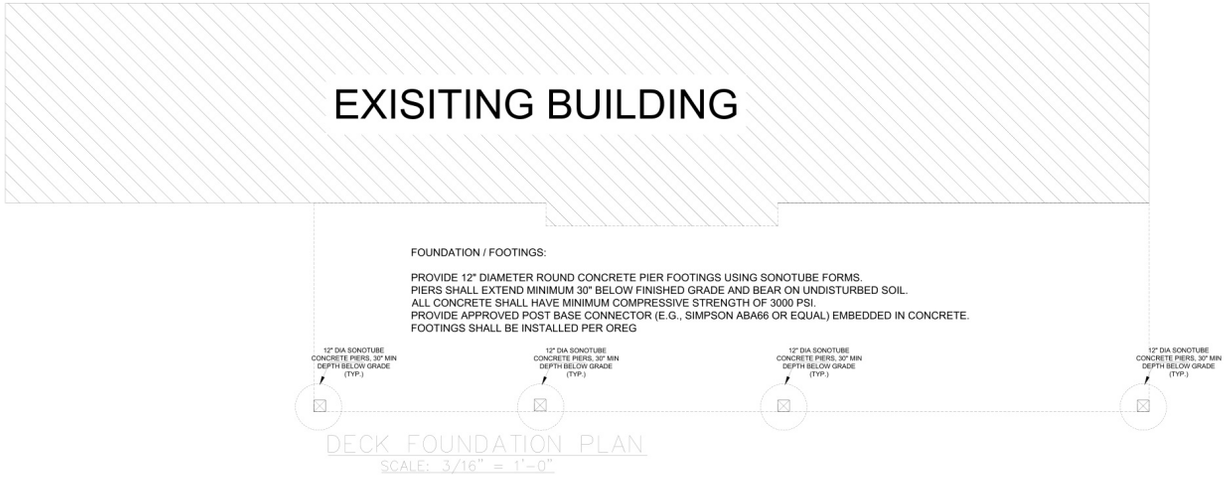

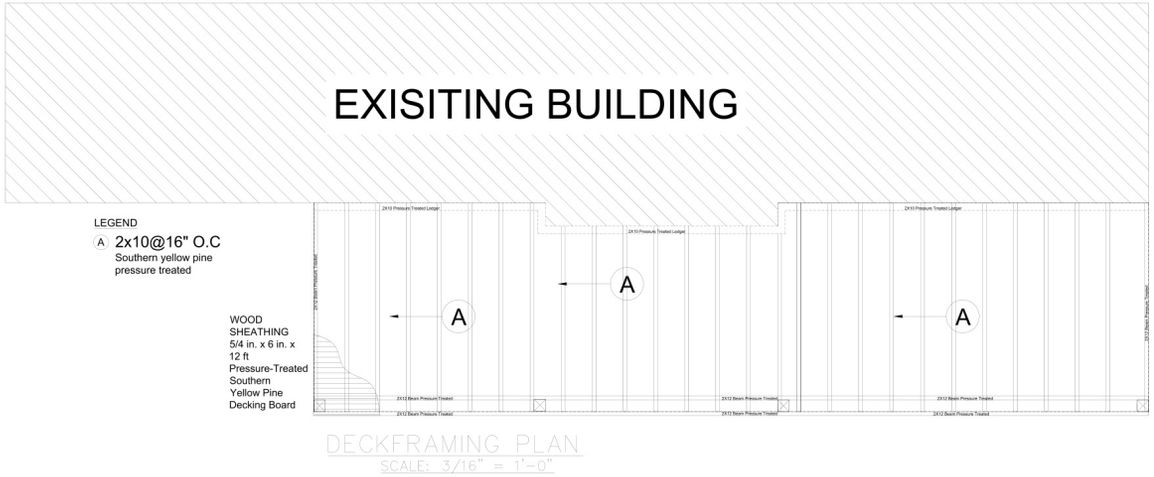

Alpharetta Front Porch

A-04 Roof and porch framing

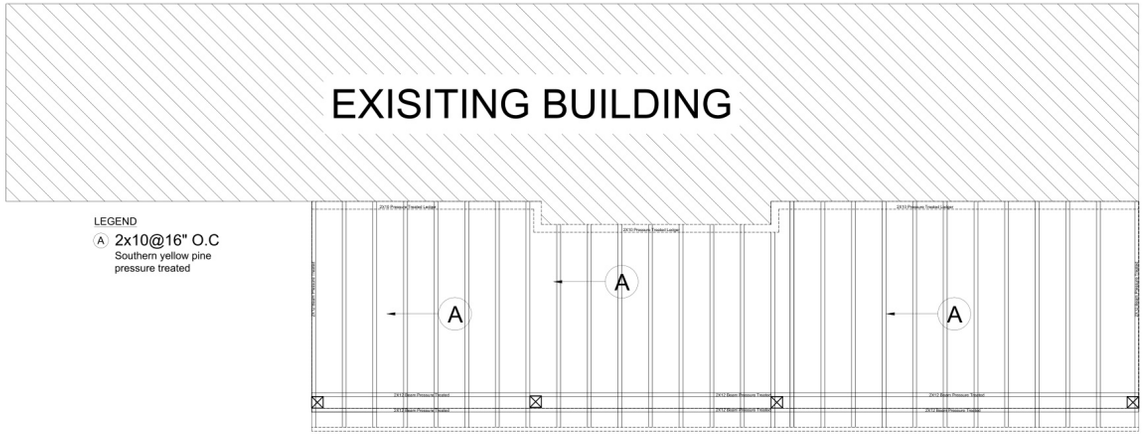

PORCH ROOF FRAMING PLAN
SCALE: 3/16" = 1'-0"

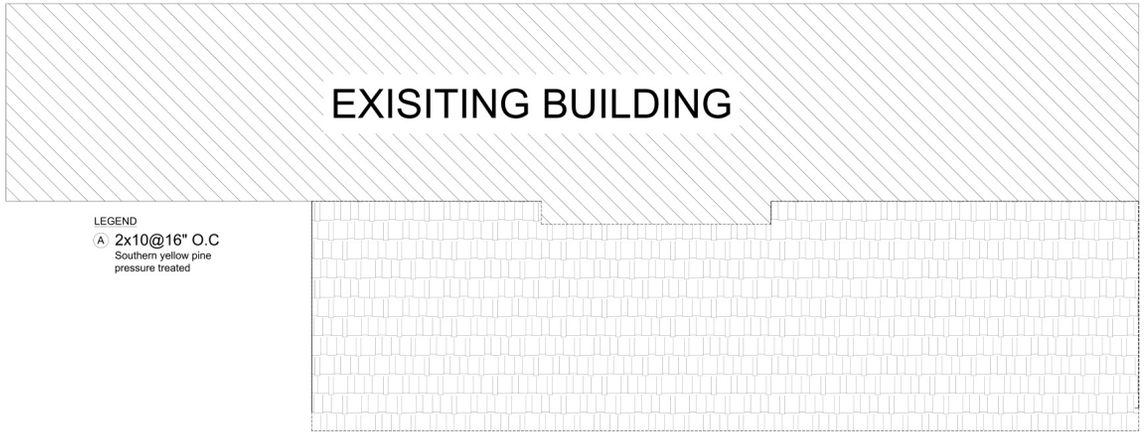

PORCH FRAMING PLAN
SCALE: 3/16" = 1'-0"

Alpharetta Front Porch

A-05 Structural connections

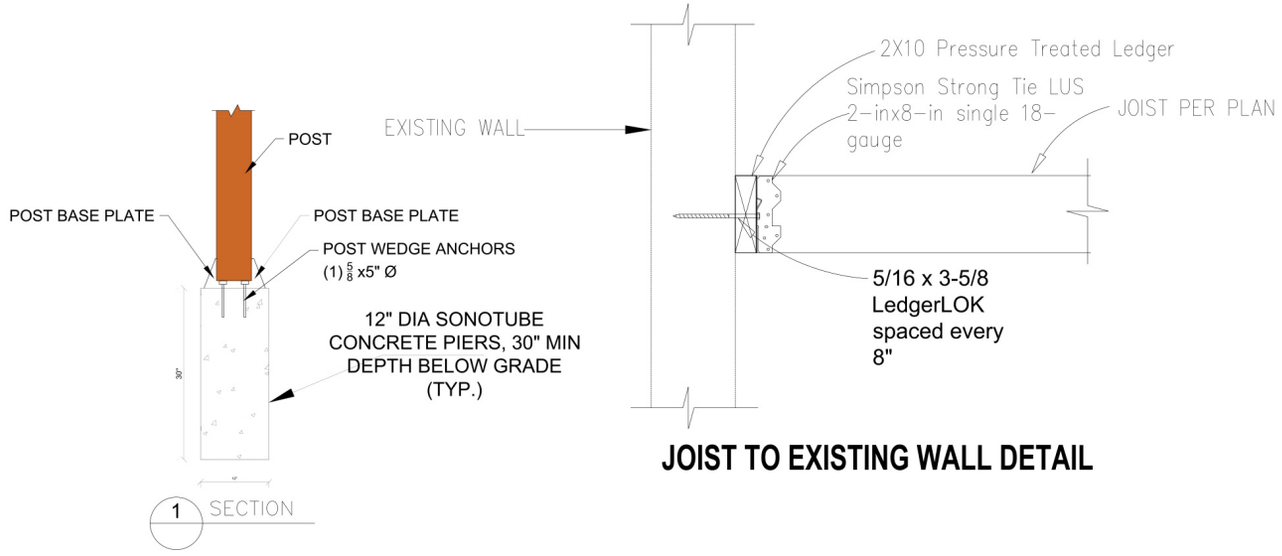

JOIST TO EXISTING WALL DETAIL

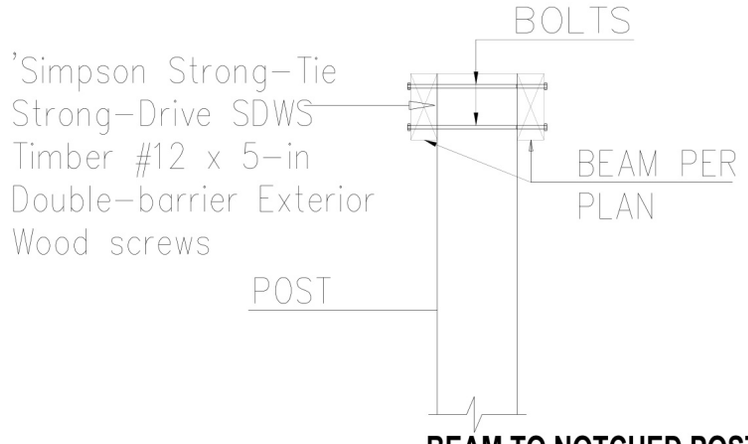

BEAM TO NOTCHED POST CONNECTION DETAIL

Alpharetta Front Porch

A-05 Elevations

